Patent Pending

ELMDENE
Security & Fire Products

ELMDENE INTERNATIONAL LIMITED
RODNEY ROAD
FRATTON
PORTSMOUTH
PO4 8SS, UK

www.elmdene.co.uk

TEL: + 44 (0) 2392 739412 / FAX: + 44 (0) 2392 811631

EN3-QSC Contact Wiring Guide

Product designed to meet the requirements of DD CLC/TS 50131-2-6:2004 **Grade 3** and Environmental **Class III**. Suitable for use in systems designed to comply with PD6662:2004 + A1+ A2

6 Wire Contact with built in resistors for use in Fully Supervised Loop or standard Double Pole systems, using Single or Multiple doors. See colour code chart below for matching Contact resistors to your Control Panel. This surface mounted magnetic contact is designed to meet the requirements of TS50131-2-6:2004 for immunity to the effects of an external interfering magnet when installed as shown overleaf.

Contact / Control Panel Colour Codes Spectrum Range

This table details the Contact colour coding system used to associate a Contact with the correct value resistors for your chosen Control Panel. The colour code is a suffix to the Contact product code. For example EN3-QSC-RD denotes a Red Contact with 4K7 and 2K2 resistors fitted. This table does NOT refer to WIRE colours; see Contact Wiring below for details of wire colours.

Code	Colour	Resistor Values	Connection Mode	Control Panel
RD	Red	4k7 / 2k2	Series	ADE, Bosch, Castle, Menvier, Pyronix, Scantronic, Texecom
GN	Green	1k0 / 1k0	Series	Honeywell
BL	Blue	8k2 / 8k2	Parallel	Guardall
GY	Grey	4k7 / 4k7	Series	Aritech, Pyronix
PU	Purple	6k8 / 4k7	Series	Guardtec
YL	Yellow	2k2 / 2k2	Series	Bosch, Europlex

Note: **DO NOT SHORTEN CABLE BEFORE READING THE FOLLOWING PARAGRAPH.**

The contact wires have been colour coded using coloured sleeving. The core wires are not coloured inside the sheath. To shorten the overall cable length, strip the sheath using the rip cord and slide the sleeves down to the required length. Then cut the cable to the required length - ensuring the coloured sleeves remain on the core wires to enable easy installation.

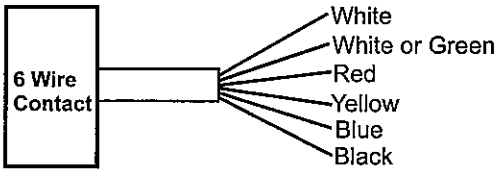

- Figures 1 & 2
- Figure 3
- Figure 4
- Figure 5
- Figure 6

Contact can be used in the following formats:

- Standard double pole - Single and double leaf doors — Figures 1 & 2
- Fully supervised loop - Single leaf door - Series mode connection — Figure 3
- Fully supervised loop - Double leaf doors - Series mode connection — Figure 4
- Fully supervised loop - Single leaf door - Parallel mode connection — Figure 5
- Fully supervised loop - Double leaf doors - Parallel mode connection — Figure 6

PARA GALAXY UTILIZAR FIGURA 3

Installation Notes

The EN3-QSC sensor must be mounted such that the magnet operates on the active sensor face (see diagram). If required, the magnet may be rotated through 90° to accommodate an angled surface fixing, e.g. An outward opening door.

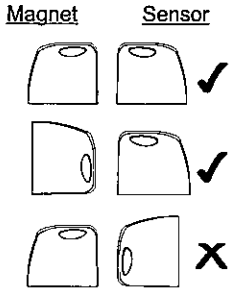

Operating Distances

Switch mounted on Non-Ferrous Surface (e.g. Wood, PVC, Aluminum)

Y	Min Close (mm)	11
	Max Open (mm)	22
+/- X	Min Close (mm)	10#
	Max Open (mm)	22#
Z	Min Close (mm)	13#
	Max Open (mm)	34#

#At Y = 6mm

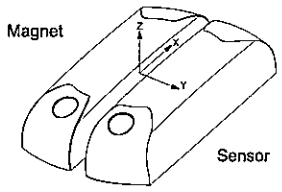

Figure 1

Standard **Double Pole** Wiring (No resistors) - Single Leaf Door Arrangement

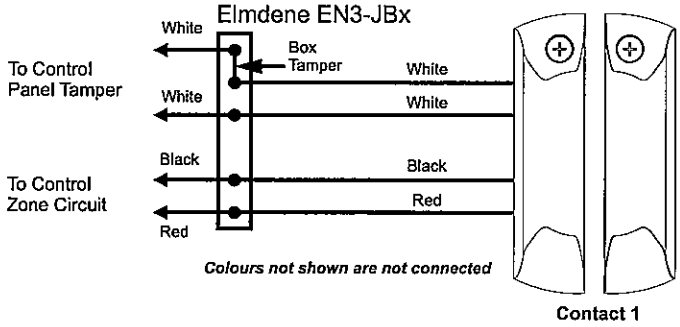

Figure 2

Standard **Double Pole** Wiring (No resistors) - Double Leaf Door Arrangement

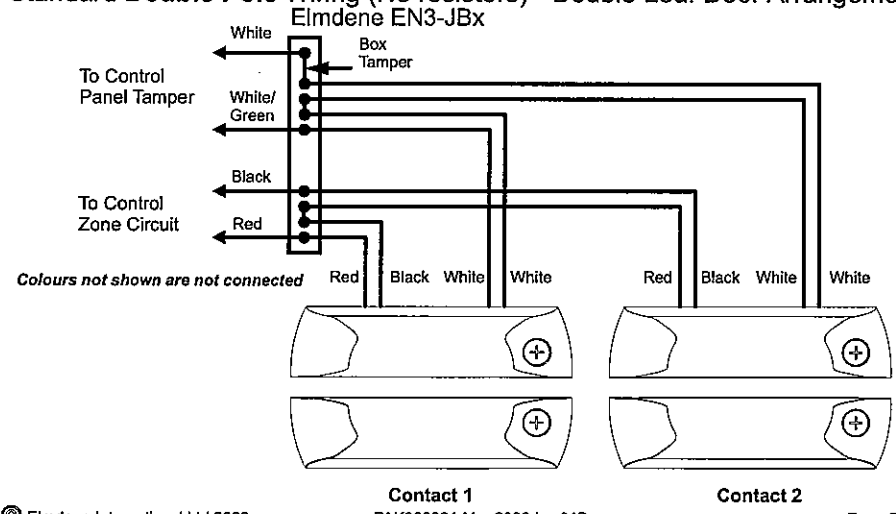

Specifications

Contact		**Housing**	
Material	Rhodium	Material	Plastic - ABS
Power Handling	10VA		
Voltage Rating	30Vdc	Sensor Dimension	70 x 17 x 15mm
Current Rating	1.0A Max	Sensor - Fixing Dimensions	52 mm centres
Resistance	<300mohms	Mounting Screws	M3
Operating Life	>1 x 10^8 operations	Magnet Dimensions	70 x 17 x 15mm
		Magnet - Fixing Dimensions	45 mm centres
		Mounting Screws	M3
		Temperature Range	-10°C to+40°C

Figure 3

Contact Resistors + **End of Line** Resistor **(Series)** - Single Leaf Door Arrangement

GALAXY

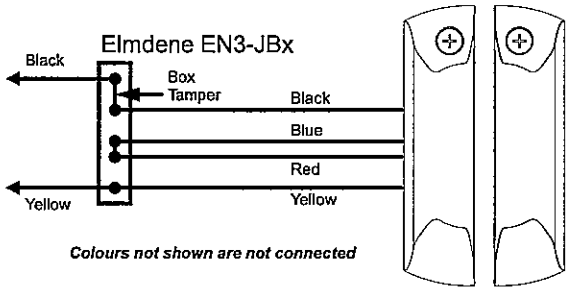

Figure 4

Contact Resistors + **End of Line** Resistor **(Series)** - Double Leaf Door Arrangement

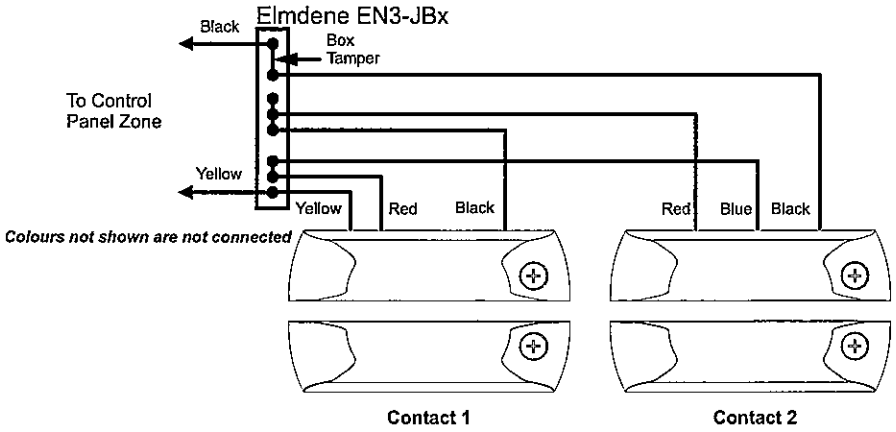

Figure 5
Contact Resistor + **End of Line** Resistor **(Parallel)** - Single Leaf Door Arrangement

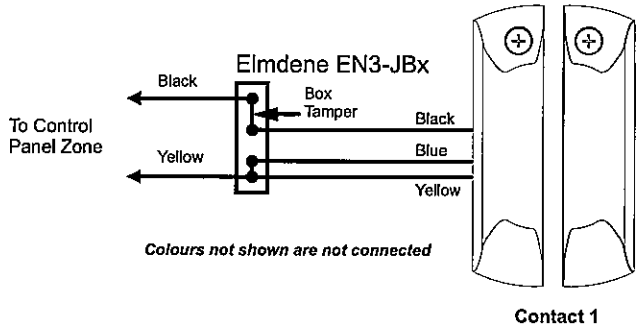

Figure 6
Contact Resistor + **End of Line** Resistor **(Parallel)** - Double Leaf Door Arrangement